TABLE 1: PRIMARY ANCHOR (TO RO CONDITION)

SUBSTRATE	LOCATION	HARDWARE (ACCEPTABLE TRADE NAME OR EQUIVALENT)	O.C. SPACING (MAX)	END DISTANCE (MAX)	EMBEDMENT (MIN)	SUBSTRATE EDGE DISTANCE (MIN)	d1 INSTALL DIMENSION
WOOD S.G. = 0.42	HEAD	1/4" Ø LAG SCREW, FULL BODY	8"	4"	1-1/2"	1"	1"
	SILL						9/16"
	JAMB						1"
CONCRETE 3,000 PSI	HEAD	1/4" Ø HILTI KWIK HUS-EZ (KH-EZ)	9"	4"	2-1/2"	1-3/4"	1"
	SILL		12"				9/16"
	JAMB		9"				1"
CONCRETE 4,000 PSI	HEAD	1/4" Ø HILTI KWIK HUS-EZ (KH-EZ)	9"	4"	2-1/2"	1-3/4"	1"
	SILL		12"				9/16"
	JAMB		9"				1"
CMU (GROUT-FILLED f'm = 1,500 PSI)	HEAD	1/4" Ø HILTI KWIK HUS-EZ (KH-EZ)	8"	4"	2-1/2"	1-1/2"	1"
	SILL		5"				9/16"
	JAMB		8"				1"
STEEL STUD (18 GA., 33 KSI)	HEAD	1/4"-14 SAE GR. 5 HEX/HWH (HILTI KWIK FLEX, DEWALT DRIL-FLEX)	5"	4"	3 THREADS	1"	1"
	SILL						9/16"
	JAMB						1"

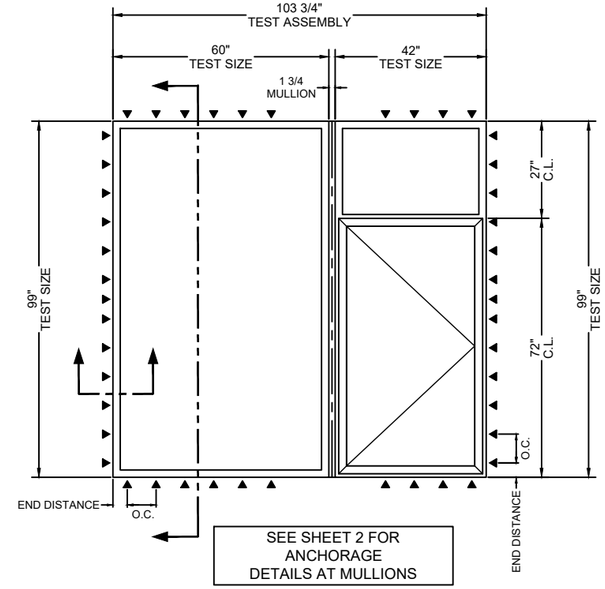

1. Installations depicted comply with:
   Florida Building Code - 8th Ed. (FBC 2023)
   International Building Code (IBC 2021)
   National Design Specifications (ANSI/AWC NDS 2018)
   Aluminum Design Manual (ADM 2020)
   Cold-Formed Steel Design Manual (AISI-S100 2020)

2. The installation depicted in this drawing and all calculations are based on a maximum size and design wind pressure rating listed below. The products **have** been proven for resistance to Large Missile Impact per ASTM E1886 / E1996 Missile Level D.

   Test Assembly Size: **103-3/4" x 99"** Design pressure: **+/- 70 psf**

3. Lag screws shall be used for a wood substrate. Screw materials and dimensions shall meet the requirements of ANSI / ASME Standard B18.2.1. All lag screw conditions must be pre-drilled with hole diameters of 40-70% of the fastener diameter. Wood buck installations are assumed to use 2 X S-P-F (G= 0.42) or denser. Tapered or partial bucks are not allowed.

4. Approved screw anchors shall be used for concrete substrate. Anchor embedment shall be as indicated herein. Install per ESR-3027 requirements. Concrete installations are assumed to be at least f'c = 3,000 (or 4,000) psi, normal weight concrete.

5. Approved screw anchors shall be used for CMU substrate. Anchor materials and dimensions shall meet the requirements of ICC-ES AC106 - Acceptance Criteria for Predrilled Fasteners (Screw Anchors) in masonry elements. Anchor embedment shall be as indicated herein. Install per ESR-3056 requirements. Concrete masonry installations are assumed at least ASTM C90, Type II, Grade N, with f'm = 1,500 psi, and type M or S mortar.

6. Approved self-drilling screws shall be used for steel stud substrate. All fasteners installed in steel studs shall be SAE grade 5 or better. Steel stud installations assume 18 gauge, 33 ksi studs and follow AISI-S100 rules and procedures.

7. Maximum shim thickness of 1/4" permitted at each fastener location. Shims shall be non-compressible and load-bearing type.

8. Drawings depict details necessary to meet structural load requirements, but do not address air infiltration, water penetration, intrusion or thermal performance requirements of the installation. See manufacturer's Installation Instructions for sealing, flashing, drainage and other requirements.

9. Minimum fastener on center spacing to be coordinated with fastener manufacturer's technical data for the expected substrate.

10. All substrate types shall be secured to the building structure to resist all design loads, and shall have widths that exceed the window frame widths.

11. Only the 1150 Series is shown in the various sections for convenience. Anchorage requirements apply equally to 1150S Series.

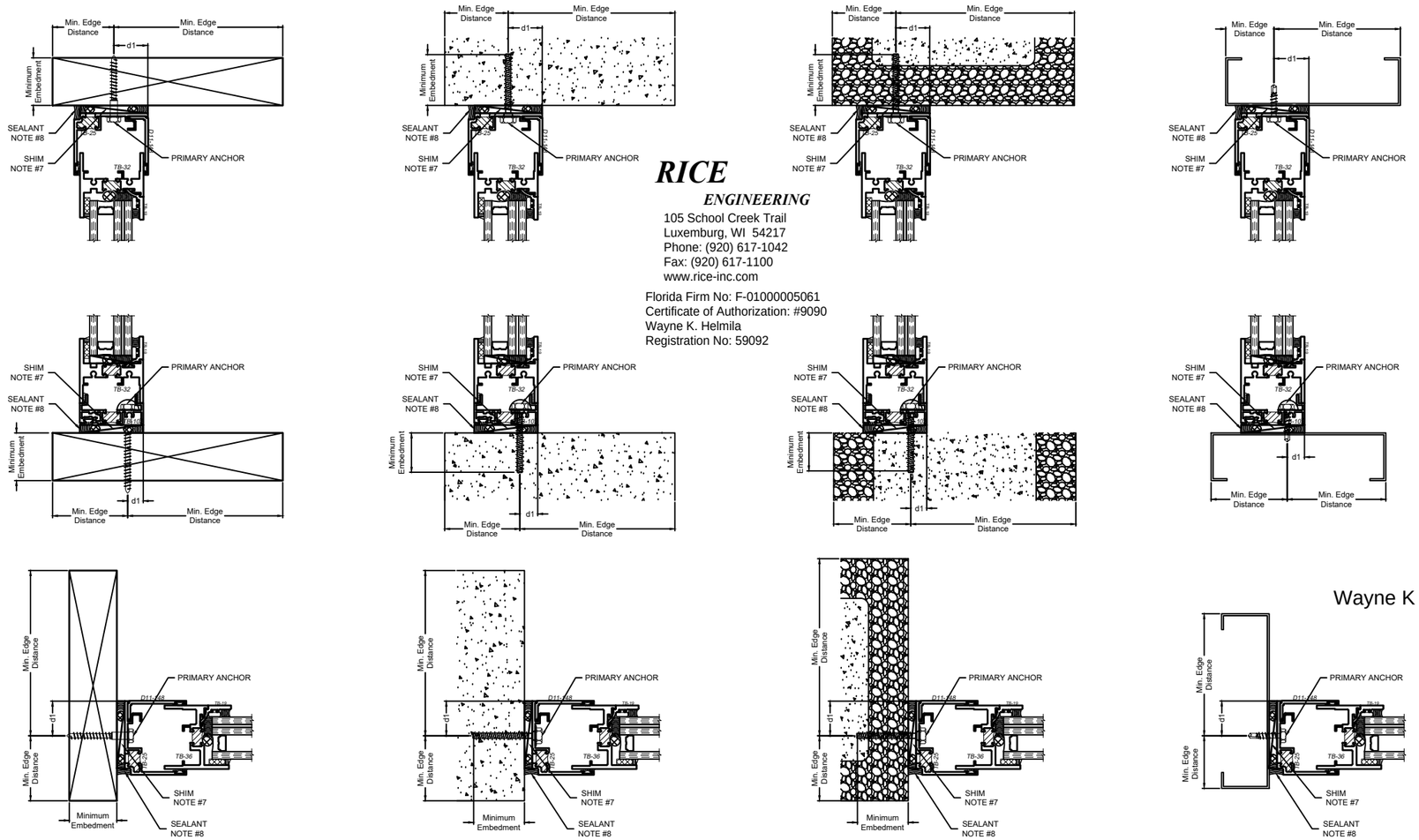

RICE
ENGINEERING
105 School Creek Trail
Luxemburg, WI 54217
Phone: (920) 617-1042
Fax: (920) 617-1100
www.rice-inc.com

Florida Firm No: F-01000005061
Certificate of Authorization: #9090
Wayne K. Helmila
Registration No: 59092

Wayne K Helmila

Digitally signed by Wayne K Helmila
DN: CN=Wayne K Helmila, dnQualifier=A01410C0000018CDB8F4AFB001A652B, O=Wisconsin, C=US
Date: 2024.07.02 08:53:24-05'00'

WAYNE K. HELMILA
LICENSE
No. 59092
STATE OF FLORIDA
PROFESSIONAL ENGINEER

07/02/2024
COA: 9090

Rev.	Description	Date
△		
△		
△		
△		
△		

Scale: NONE
Drawn by: A. KEARNEY

Winco Window Co.
6200 Maple Ave.
St. Louis, MO 63130

PHONE: 314-725-8088

WINCO Product:
1150-1150S FIXED & CASEMENT

Installation:
ANCHORAGE: SUBFRAME SHT. 1 OF 3

Certification:
LMI - 1150-1150S - D MISSILE

TABLE 2: ANCHOR CLUSTER CENTERED ON MULLION AT SILL SUPERCEDES NORMAL O.C. SPACING WHERE CLUSTER OCCURS				
SUBSTRATE	LOCATION	HARDWARE (ACCEPTABLE TRADE NAME OR EQUIVALENT)	QUANTITY	O.C. SPACING (MAX)
WOOD S.G. = 0.42	SILL	1/4" Ø LAG SCREW, FULL BODY	8	4"
CONCRETE 3,000 PSI	SILL	1/4" Ø HILTI KWIK HUS-EZ (KH-EZ)	6	5"
CONCRETE 4,000 PSI	SILL	1/4" Ø HILTI KWIK HUS-EZ (KH-EZ)	6	5"
CMU (GROUT-FILLED f'm = 1,500 PSI)	SILL	1/4" Ø HILTI KWIK HUS-EZ (KH-EZ)	8	4"
STEEL STUD (18 GA., 33 KSI)	SILL	1/4"-14 SAE GR. 5 HEX/HWH (HILTI KWIK FLEX, DEWALT DRIL-FLEX)	11	2"

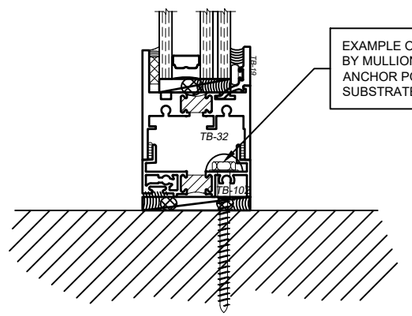

EXAMPLE OF ANCHOR LOCATION REFERENCED BY MULLION ANCHOR CLUSTER. ANCHOR POSITION, EMBEDMENT, AND SUBSTRATE EDGE DISTANCE TO MATCH TABLE 1

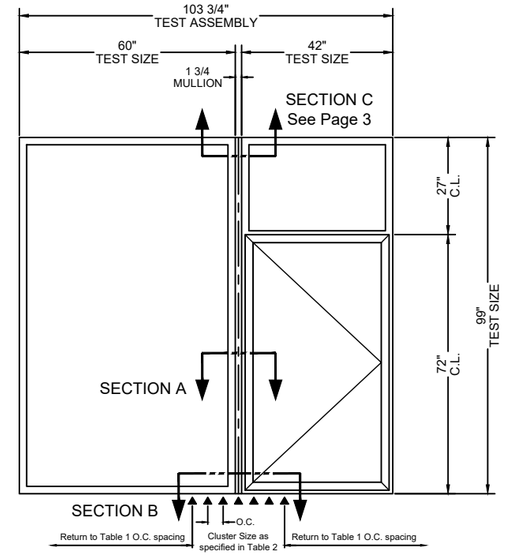

ANCHOR CLUSTER AT MULLIONS (SEE SHEET 1 FOR ANCHORAGE DETAILS AT ALL OTHER LOCATIONS)

WINCO WINDOW

See Sheet 1 for general notes.

RICE
ENGINEERING
105 School Creek Trail
Luxemburg, WI 54217
Phone: (920) 617-1042
Fax: (920) 617-1100
www.rice-inc.com

Florida Firm No: F-01000005061
Certificate of Authorization: #9090
Wayne K. Helmila
Registration No: 59092

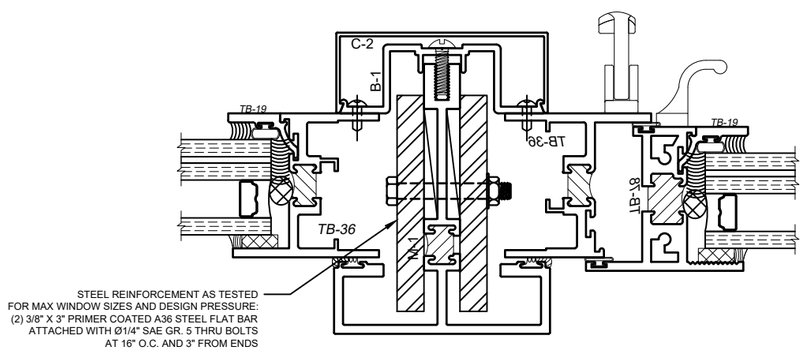

SECTION A: STEEL REINFORCEMENT

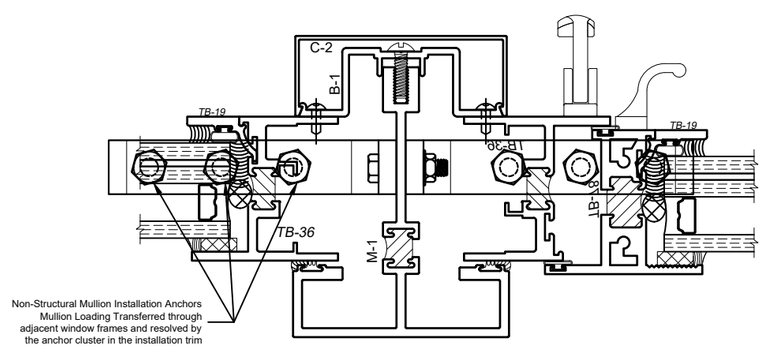

SECTION B: MULLION ATTACHMENT AT SILL

ATTACHMENTS AT MULLION

MULLION CLAMP ANCHORAGE TO MULLION & FRAME

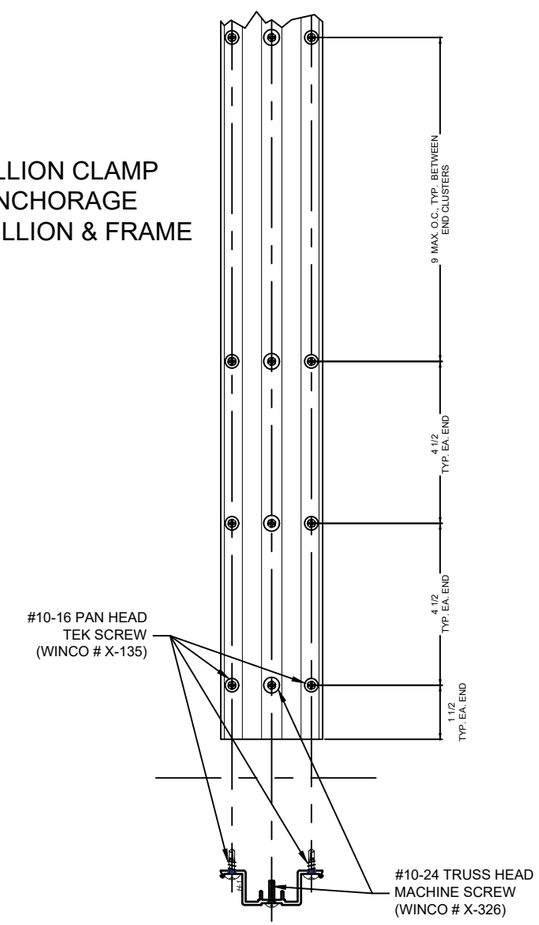

GLAZING MAKE-UP AND SERIES VARIATION

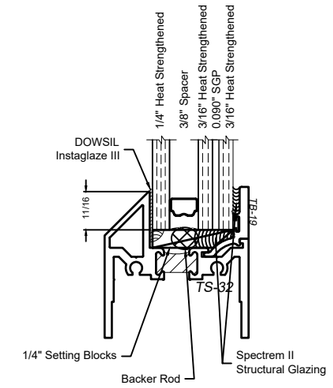

1150S

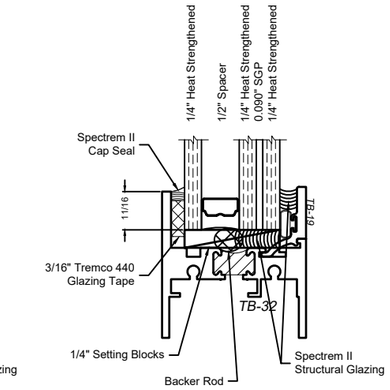

1150

07/02/2024
COA: 9090

Rev.	Description	Date
△		
△		
△		
△		
△		

Scale: NONE
Drawn by: A. KEARNEY

Winco Window Co.
6200 Maple Ave.
St. Louis, MO 63130

PHONE: 314-725-8088

WINCO Product: 1150-1150S FIXED & CASEMENT
Installation: ANCHORAGE: SUBFRAME SHT. 2 OF 3
Certification: LMI - 1150-1150S - D MISSILE

TABLE 3: MULLION INSTALLATION ANGLES AT HEAD
(2) ANGLES REQUIRED PER MULLION

PRIMARY ANCHOR: ANGLE TO SUBSTRATE						*THRU BOLTS: ANGLE TO MULLION STEM*	
SUBSTRATE	LOCATION	HARDWARE (ACCEPTABLE TRADE NAME OR EQUIVALENT)	QUANTITY REQUIRED PER ANGLE (2 ANGLES REQUIRED)	EMBEDMENT (MIN)	SUBSTRATE EDGE DISTANCE (MIN)	*THRU BOLT SPECIFICATIONS*	*TOTAL QUANTITY REQUIRED (BOLT HOLES TO ALIGN WITH BOTH ANGLES)*
WOOD S.G. = 0.42	HEAD	#12 WOOD SCREWS	6	1-1/2"	1"	1/4-20 SAE GRADE 5 STEEL HEX HEAD SECURED WITH STEEL NUT, WASHER, AND LOCK WASHER FOR Ø1/4" BOLTS	4
CONCRETE 3,000 PSI	HEAD	3/8" Ø HILTI KWIK HUS-EZ (KH-EZ)	2	3-1/4"	3-3/4"		
CONCRETE 4,000 PSI	HEAD	3/8" Ø HILTI KWIK HUS-EZ (KH-EZ)	2	3-1/4"	3-3/4"		
CMU (GROUT-FILLED f'm = 1,500 PSI)	HEAD	3/8" Ø HILTI KWIK HUS-EZ (KH-EZ)	2	3-1/4"	3-3/4"		
STEEL STUD (18 GA., 33 KSI)	HEAD	1/4"-14 SAE GR. 5 HEX/HWH (HILTI KWIK FLEX, DEWALT DRIL-FLEX)	6	3 THREADS	1"		

**NOTE: Angles shown are based on maximum size and design pressure requirements and may not be required for lower pressures and/or smaller sizes pending project specific analysis.

RICE
ENGINEERING
105 School Creek Trail
Luxemburg, WI 54217
Phone: (920) 617-1042
Fax: (920) 617-1100
www.rice-inc.com

Florida Firm No: F-01000005061
Certificate of Authorization: #9090
Wayne K. Helmila
Registration No: 59092

WAYNE K. HELMILA
LICENSE
No. 59092
STATE OF FLORIDA
PROFESSIONAL ENGINEER

07/02/2024
COA: 9090

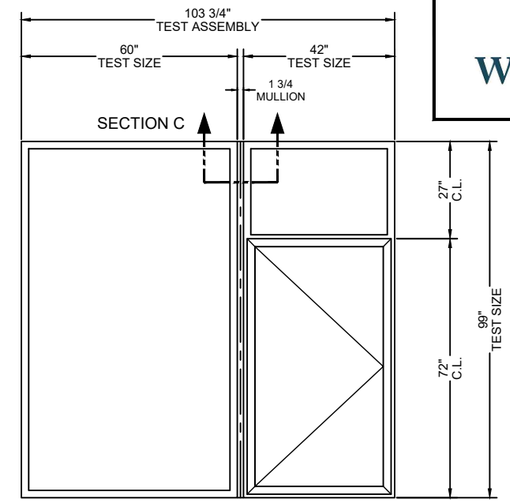

MULLION ATTACHMENT AT HEAD
(SEE SHEETS 1 & 2 FOR ANCHORAGE DETAILS AT ALL OTHER LOCATIONS)

See Sheet 1 for general notes.

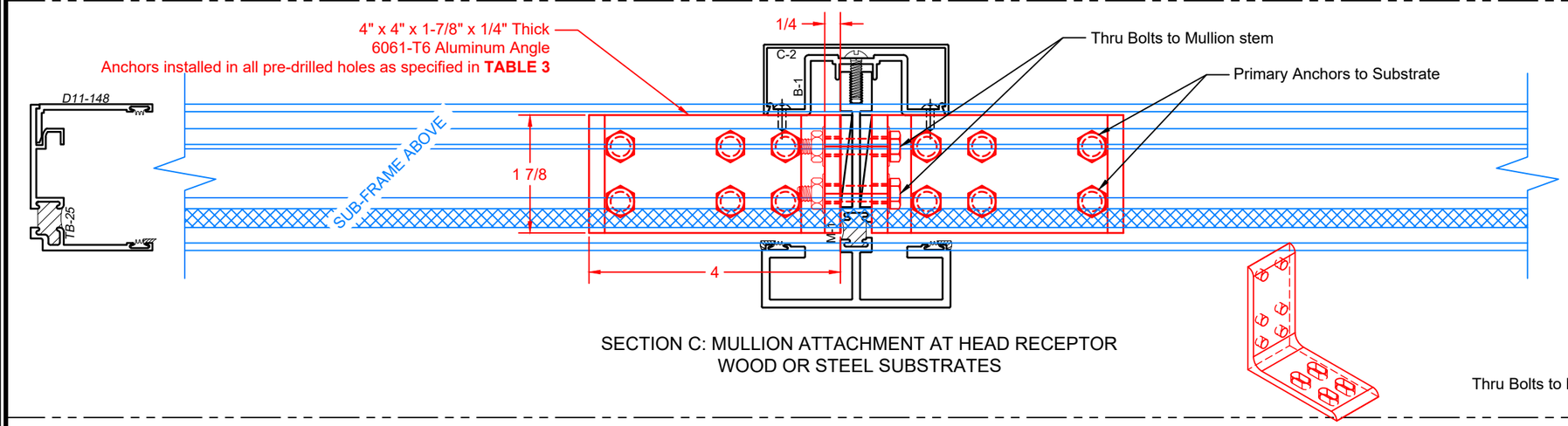

SECTION C: MULLION ATTACHMENT AT HEAD RECEPTOR
WOOD OR STEEL SUBSTRATES

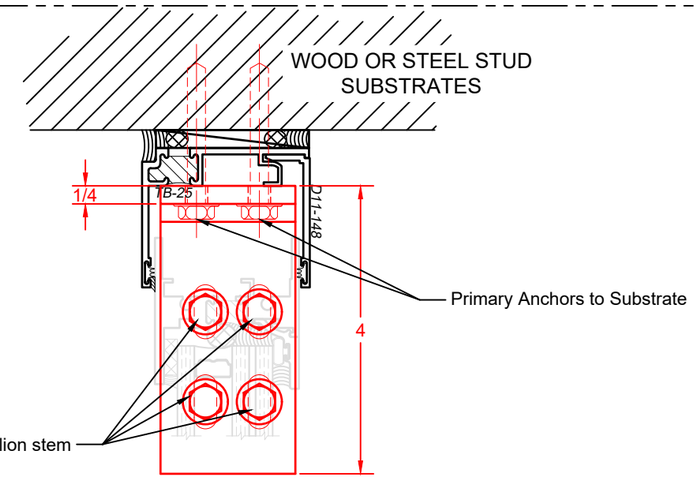

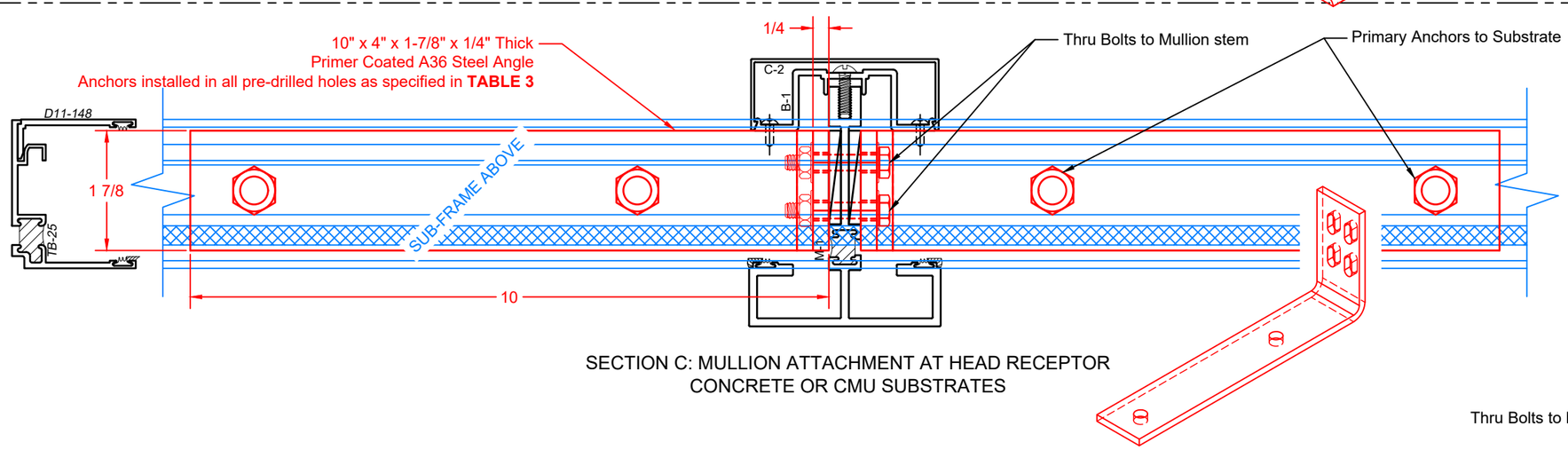

SECTION C: MULLION ATTACHMENT AT HEAD RECEPTOR
CONCRETE OR CMU SUBSTRATES

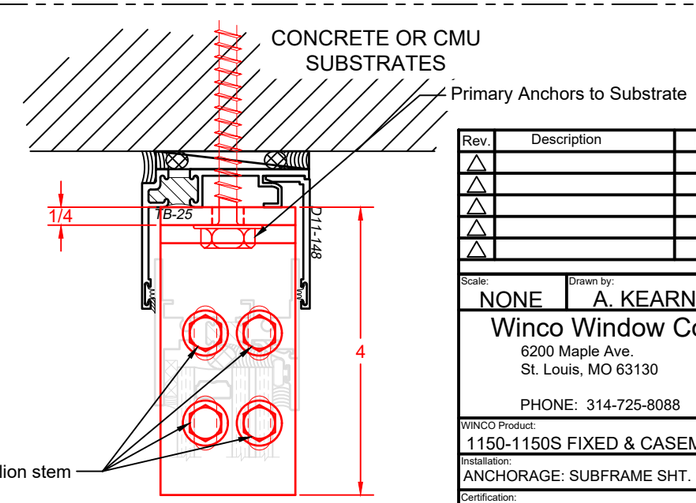

Rev.	Description	Date
△		
△		
△		
△		
△		

Scale: NONE
Drawn by: A. KEARNEY

Winco Window Co.
6200 Maple Ave.
St. Louis, MO 63130

PHONE: 314-725-8088

WINCO Product:
1150-1150S FIXED & CASEMENT

Installation:
ANCHORAGE: SUBFRAME SHT. 3 OF 3

Certification:
LMI - 1150-1150S - D MISSILE